C-XXX-XXXX

REVISION 0

OPERATOR, UNIT, AND DIRECT SUPPORT MAINTENANCE COURSE

FOR

2 KW MILITARY TACTICAL GENERATOR SETS

MEP-531A - 120 VAC, 60 HZ
MEP-501A - 28 VDC

STUDENT GUIDE

May 1998

PUBLISHED UNDER AUTHORITY OF THE DEPARTMENT OF THE ARMY

STUDENT NAME PAGE
Student Guide

Name _____

Class No. _____

LIST OF EFFECTIVE PAGES

Page No.	in Effect	Page No.	in Effect	Page No.	in Effect

Letter of Promulgation

(furnished by government)

CHANGE RECORD

Name and Description of Change	Entered By	Date

HAZARD AWARENESS NOTICE

All personnel involved with operation or maintenance of the generator set must be thoroughly familiar with the equipment safety precautions contained in the Operator, Unit and Direct Support Maintenance Manual.

Pay extreme close attention to specific cautions and warnings throughout the technical manual during training exercises to prevent injury to personnel and damage to the equipment.

HIGH VOLTAGE is used in the operation of this equipment. **DEATH** or severe injury may result if personnel fail to observe safety precautions.

Report all hazards. If at any time you detect a hazard, it is your responsibility to report the hazard to the next person in your chain of command. this person should ensure that the hazard is investigated, publicized, or corrected, as required.

The following warnings are contained in the Operator's, Unit and Direct Support Maintenance Manual - Safety Summary:

WARNING

High Voltage is produced when this generator set is in operation. Use care when working around an open control panel with the generator set operating. Improper operation and/or failure to follow this warning could result in personal injury or death by electrocution.

WARNING

Never attempt to start the generator set if it is not properly grounded. Failure to observe this warning could result in serious injury or death by electrocution.

WARNING

Never attempt to connect or disconnect load cables while the generator is running. Failure to observe this warning could result in severe personal injury or death by electrocution.

WARNING

DC voltages are present at generator set electrical components even with generator set shutdown. Avoid grounding self when touching any electrical components. Failure to observe this warning can result in personal injury.

WARNING

The fuels in this generator set are flammable. Do not smoke or use open flame when performing maintenance. Flames and explosion could result in severe personal injury or death.

WARNING

Hot fueling of generators while they are operating presents a safety hazard and should not be attempted. Hot engine surfaces and sparks produced from the engine and generator circuitry are possible sources of ignition. Failure to observe this warning could result in severe personal injury or death.

WARNING

Exhaust discharge contains deadly gases. Do not operate generator set in enclosed area unless exhaust discharge is properly vented outside. Position as far away from personnel, shelters, and occupied vehicles as possible. Failure to observe this warning could result in severe personal injury or death due to carbon monoxide poisoning.

WARNING

Liquids under pressure are generated as a result of operation of the generator set. High pressure leaks could cause severe personal injury or death.

WARNING

Avoid contacting metal items with bare skin in extreme cold weather. Failure to observe this warning can result in personal injury.

WARNING

Remove metal jewelry when working on electrical system/components. Failure to observe this warning could cause severe personnel injury from electric shock.

WARNING

The noise level of this generator set when operating could cause hearing damage. Hearing protective devices must be worn when operating or working within 13 feet of the generator set when it is running. Failure to observe this warning can result in personal injury.

WARNING

Most cleaning solvents are flammable and toxic to eyes, skin, and respiratory tract. Skin/eye protection required. Avoid repeated/prolonged contact. Good general ventilation is normally adequate.

WARNING

When using compressed air, wear protective glasses and use clean, low pressure air, 30 psi (206.8 kPa) maximum. Failure to follow these instructions could result in eye injury.

WARNING

When changing/draining oil, use chemical splash goggles to protect eyes.

WARNING

Proper Personal Protection Equipment (PPE) must be used in accordance with OSHA Regulation 29 CFR 1926.62 to protect employees from adverse health hazards of lead or lead dust in the air while sanding CARC paint. Consult your local Safety Office before working on CARC painted surfaces.

WARNING

Some adhesives used in this generator set are flammable and toxic. Vapors may ignite explosively. Avoid breathing in vapors. Provide adequate ventilation to prevent vapor concentrations in excess of permissible exposure levels. Keep away from heat, sparks, and open flame. Do not smoke. Extinguish all flames and turn off non-explosion-proof electrical equipment during use until vapors are dissipated. Close container tightly after use. Contains Methylethketone. Avoid swallowing.

WARNING

Since the N (neutral) for MEP-531A and - (ground) for MEP-501A load terminal is grounded to the frame and ground stud on the generator set, ensure that the neutrals are connected in the distribution system.

WARNING

Be aware, the lock retaining clips could make contact with the load terminal board cover with the potential for electrical shock.

WARNING

When servicing the fuel tank, use a container or cloth to catch the excess fuel to prevent spilling over engine components. Be sure to properly dispose of diesel fuel and diesel fuel soaked cloth.

FOR FIRST AID REFER TO FM 21-11.

TABLE OF CONTENTS

Contents Page

FRONT MATTER

Cover i
Student Name Page ii
List of Effective Pages iii
Letter of Promulgation iv
Record of Change v
Hazard Awareness Notice vi
Table of Contents x
How to Use Your Student Guide xii

1. COURSE INTRODUCTION, GENERATOR SET DESCRIPTION AND PRINCIPLES OF OPERATION

1-1 Course Introduction

Outline Sheet 1-1-1 1
Diagram Sheet 1-1-1 2
Diagram Sheet 1-1-2 3

1-2 Generator Set Description

Outline Sheet 1-2-1 4
Diagram Sheet 1-2-1 6
Diagram Sheet 1-2-2 7

1-3 Principles of Operation

Outline Sheet 1-3-1 8
Diagram Sheet 1-3-1 16
Diagram Sheet 1-3-2 17
Diagram Sheet 1-3-3 18
Diagram Sheet 1-3-4 19
Diagram Sheet 1-3-5 20
Diagram Sheet 1-3-6 21
Diagram Sheet 1-3-7 22

2. TECHNICAL DOCUMENTATION

2-1 Introduction to Technical Manuals

Outline Sheet 2-1-1 23
Diagram Sheet 2-1-1 26

3. OPERATING PROCEDURES

3-1 Operation

Outline Sheet 3-1-1 27
Job Sheet 3-1-1 29

TABLE OF CONTENTS - Continued

Contents Page

4. TROUBLESHOOTING

4-1 Operator Troubleshooting

Outline Sheet 4-1-1 32
Job Sheet 4-1-1 33

4-2 Unit/DS Troubleshooting

Outline Sheet 4-2-1 35
Job Sheet 4-2-1 36

5. MAINTENANCE

5-1 Generator Set Preventive Maintenance Checks and Services (PMCS)

Outline Sheet 5-1-1 38
Job Sheet 5-1-1 39

5-2 Engine Starter (MEP-531A) Replacement

Outline Sheet 5-2-1 41
Job Sheet 5-2-1 42

6. CORROSION CONTROL

6-1 Corrosion Control Procedures

Outline Sheet 6-1-1 43

HOW TO USE YOUR STUDENT GUIDE

This Student Guide has been prepared to follow the course of instruction and has space for you to take notes on the information presented. It is arranged in accordance with the topics taught, and is in sequence with those topics. By using the table of contents you should be able to locate the lesson topics easily. Upon return to your command, it is recommended that you retain this Student Guide for future reference.

OTHER PUBLICATIONS

1. Operator, Unit and Direct Support Maintenance Including Repair Parts and Special Tools List (Generator Set)

PRESENTATION OF COURSE MATERIAL

The course material on the generator set is divided into Sections and Topics. Safety is stressed throughout. The knowledge and skill objectives are stated so you can check your progress.

As the instructor presents the lesson material, you will be directed to follow along in the Student Guide or to reference the technical documentation.

WRITTEN AND PERFORMANCE TESTS

A written test to measure knowledge and a performance test to measure skills will be administered by the instructor at the end of the course.

SAFETY PRECAUTIONS

The generator set employs voltages that are dangerous and may be fatal if contacted by operating or maintenance personnel. Extreme caution should be used when working with the equipment. NEVER measure potentials in excess of 100 volts by means of flexible test leads or probes. While every practical precaution has been incorporated in this equipment, general safety practices must be observed at all times.

Read and heed the safety and warning placards located at various locations on the generator set. Practice safety while learning and maintaining the equipment. **TAKE TIME TO BE SAFE.**

SECURITY

The contents of this Student Guide is unclassified.

In the event that classified information is added to this Student Guide as a result of trainee notes, the Student Guide shall be marked and handled in accordance with the regulations of the latest edition of the Department of the Army Supplement to the DOD Information Security Program.

OUTLINE SHEET 1-1-1

COURSE INTRODUCTION

A. Introduction

This Outline Sheet provides you with an outline of the course content, schedule, and objective. You should fill in the blanks and retain this information for future use.

B. Outline

1. Introduction - Instructor's Name _____

a. Course Title:

See Diagram Sheet 1-1-1

b. Course Content:

(1) Reference Documentation:

(a) Generator Set Maintenance Manual - TM 9-6115-673-13&P.

(2) Class Schedule:

See Class Schedule Handout

(3) Testing:

(a) Written Test

(b) Performance Test

c. Course Objective:

See Diagram Sheet 1-1-2

DIAGRAM SHEET 1-1-1

COURSE TITLE

OPERATOR, UNIT AND DIRECT SUPPORT

MAINTENANCE COURSE

FOR

2 KW MILITARY TACTICAL GENERATOR SETS

MEP-531A - 120 VAC, 60 HZ
MEP-501A - 28 VDC

DIAGRAM SHEET 1-1-2

COURSE OBJECTIVE

UPON COMPLETION OF THIS COURSE, POWER GENERATOR EQUIPMENT OPERATORS AND REPAIRERS WILL HAVE SUFFICIENT KNOWLEDGE TO OPERATE AND PERFORM OPERATOR, UNIT AND DIRECT SUPPORT MAINTENANCE ON THE 2 KW MILITARY TACTICAL GENERATOR SETS; INCLUDING SERVICING, TROUBLESHOOTING, PREVENTIVE AND CORRECTIVE MAINTENANCE IN THE FIELD AND IN A MAINTENANCE FACILITY ENVIRONMENT.

OUTLINE SHEET 1-2-1

GENERATOR SET DESCRIPTION

A. Introduction

1. This Outline Sheet provides you with an outline of the major teaching points in lesson topic: Generator Set Description. You should fill in the blanks and retain this information for future use.

B. Outline

1. Topic Learning Objectives:

a. You will be able to describe the _____ _____ and the manufacturer's _____.

b. You will be able to identify the major _____ of the generator set.

2. Description of Generator Set (References: TM, Chapter 1, Sections I and II; and Diagram Sheet 1-2-1:

a. Models:

(1) MEP-501A - _____ generator set, equipped with a _____ vdc alternator.

(2) MEP-531A - _____ generator set equipped with a _____ vac alternator.

b. Generator sets are general purpose, _____-_____, skid mounted, diesel engine powered, _____ units.

c. Sets are normally started manually with a _____ starting device, but can be started with a ____ vdc power source connected to the _____ receptacle.

d. Sets are _____-weight and require a _____-person lift.

(1) MEP-_____ - 123.5 lbs (56.0 Kg) dry weight

(2) MEP-_____ - 140.2 lbs (63.6 Kg) dry weight

e. Sets are designed to operate as _____ _____ in rain and snow at ambient temperatures between _____ (-46°C) and _____ (50°C).

f. Generator set is warranted against _____ defect(s) by Dewey Corporation for a period of 12 months or 1200 operating hours, whichever occurs _____.

3. Major Components (References: TM, paragraph 1.10; and Diagram Sheet 1-2-2).

a. Skid Base

(1) Supports generator set _____.

(2) Material - 1 inch square tubular _____.

(3) _____ tiedown points - One at each _____ of frame.

(4) Designed to support stacking sets _____ high, but sets should be tied down through the four corner _____ points if transported in this mode.

b. Diesel Engine

(1) Yanmar built, type L48AE-DEG, ___ cylinder, ___ cycle, 4.2 HP @ _____ rpm.

(2) Operates on DL-1, _____, or JP-8.

(3) Provides _____ drive for alternator.

c. Alternator

(1) MEP-501A - Balmar built, Model 10-94-24-M2-PC. _____, revolving field, _____-_____, revolving field, _____-type alternator rectified to 28 vdc.

(2) MEP-531A - Built by Dewey Electronics Corporation, Model 51463-501. Two-pole, _____ field, brush-type, 120 vac, _____ phase, ___ hertz alternator.

(3) Coupled directly to rear of diesel _____.

d. Control Panel Assembly

(1) Houses electric circuitry, _____, and _____ necessary for operation of the generator set.

(2) Mounted to skid base at _____ of generator set.

e. Fuel Tank

(1) Constructed of high density _____ with removable fuel fill _____.

(2) Capacity - _____ gal. (4.6 l)

(3) Mounted to skid base above _____.

DIAGRAM SHEET 1-2-1

DESCRIPTION OF GENERATOR SET

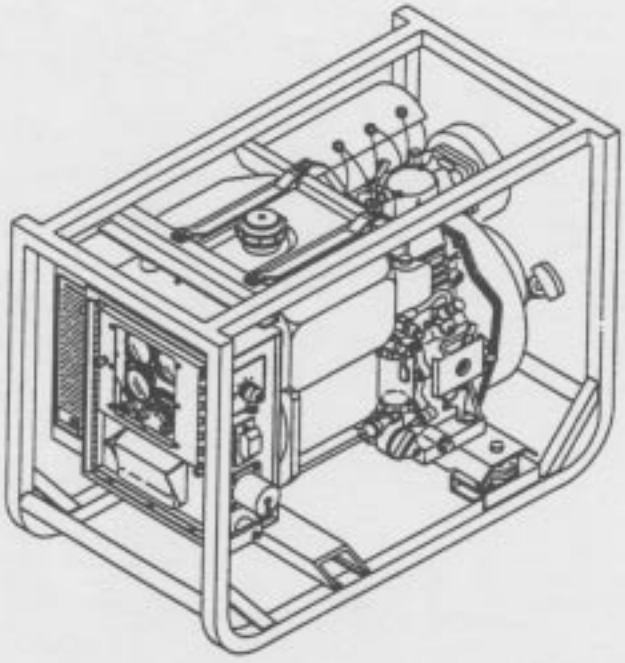

MEP-531A

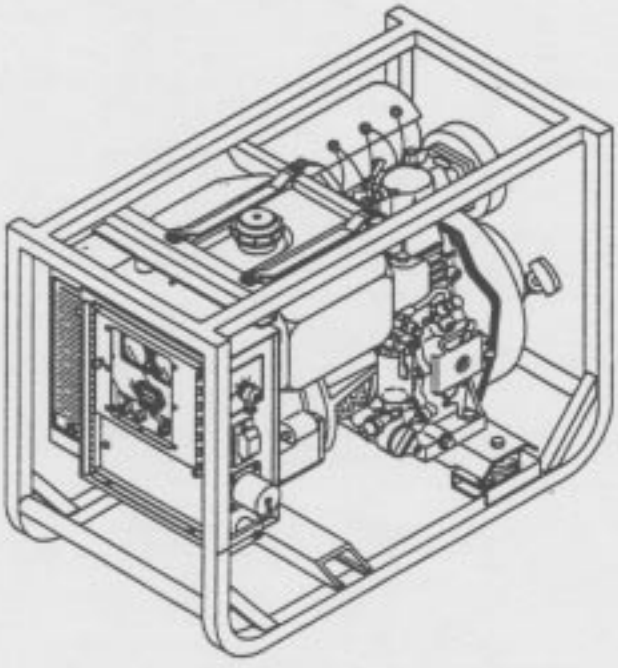

MEP-501A

DIAGRAM SHEET 1-2-2

MAJOR COMPONENTS

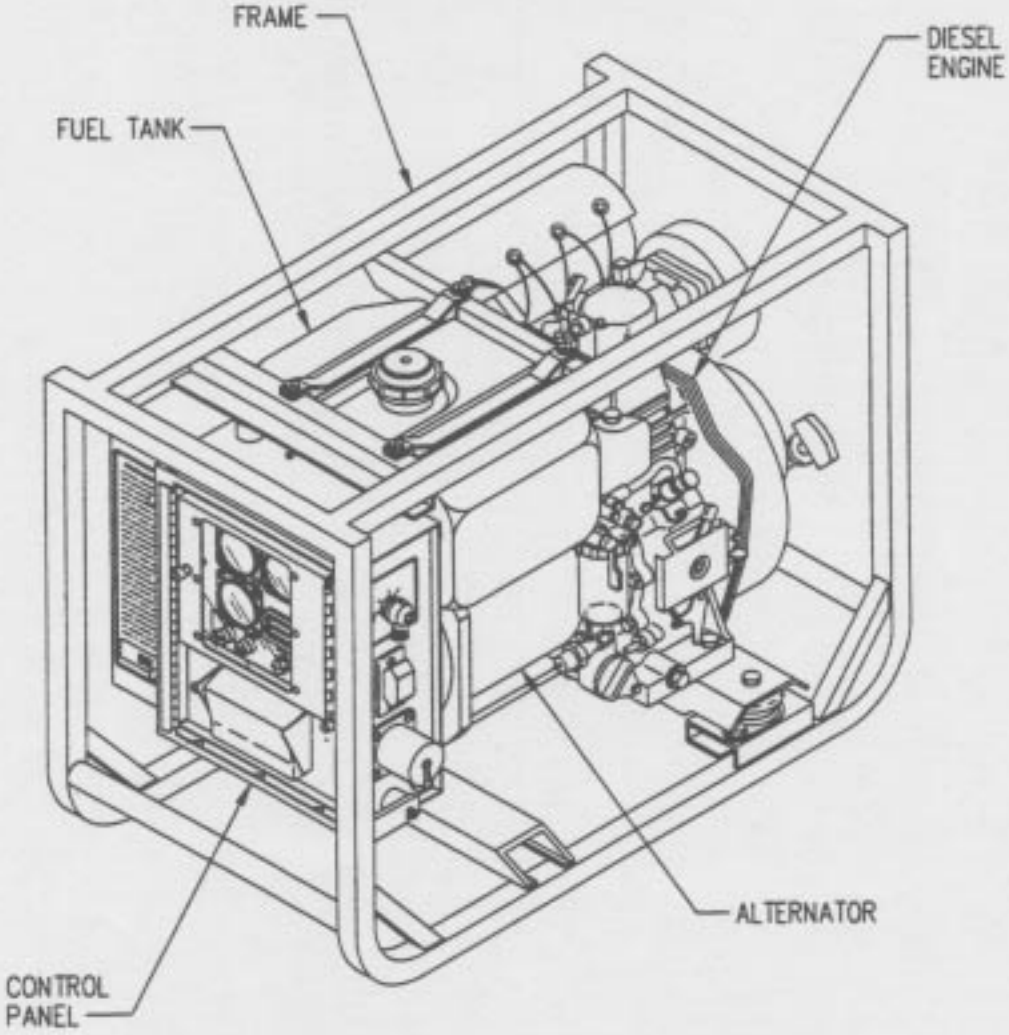

OUTLINE SHEET 1-3-1

PRINCIPLES OF OPERATION

A. Introduction

1. This Outline Sheet provides you with an outline of the major teaching points in lesson topic: Principles of Operation. You should fill in the blanks and retain this information for future use.

B. Outline

1. Topic Learning Objectives:

a. You will be able to describe the principles of operation for the major _____ of the generator set.

2. Principles of Operation for Generator Set Systems (Reference: TM, Chapter 1, Section III).

a. Fuel System - Provides filtered, pressurized diesel fuel to the diesel engine (References: TM, paragraph 1.17; and Diagram Sheet 1-3-1).

(1) Fuel Tank

(a) Reservoir for diesel fuel to provide 3.6 hrs of generator set operation @ _____ load.

(b) Tank has plastic mesh _____ in filler neck to filter impurities from fuel during service.

(c) Tank has drain cock to _____ fuel from tank.

(d) Supplies fuel to fuel _____ via a flexible plastic tube.

(2) Fuel Filter

(a) Diesel fuel supplied from fuel _____, flows through a throw-away _____ filter to remove impurities and water prior to reaching fuel injection _____.

(b) Filter head incorporates a fuel _____ valve which closes fuel system at fuel filter inlet and two _____ screws for removing trapped air in fuel system.

(c) A flexible plastic tube connects fuel filter to fuel injection _____.

(3) Fuel Injection Pump

(a) Controlled by engine's mechanical _____.

(b) Delivers pressurized fuel to fuel _____ via high pressure _____ tubing.

(4) Fuel Injector

(a) Sprays the fuel into the engine _____ combustion chamber.

(b) Unused fuel is returned to the fuel _____ via plastic tubing.

b. Air Intake and Exhaust System - Provides filtered air to the diesel engine and an outlet for exhaust gases produced by air/diesel fuel combustion (References: TM, paragraph 1.18; and Diagram Sheet 1-3-2).

(1) Air Cleaner

(a) Intake air is drawn through a washable _____ pre-filter and disposable _____ filter which trap any airborne dirt.

(b) The filtered air is pulled out of the air cleaner, to the _____ manifold.

(2) Intake Manifold and Combustion Chamber

(a) Air is drawn from the intake manifold, during the _____ stroke, into the cylinder combustion chamber.

(b) Pressurized _____ is _____ into the cylinder combustion chamber where the fuel/air mixture is burned.

(3) Exhaust Manifold

(a) During the _____ stroke, combusted gases are pushed into the exhaust manifold.

(b) The manifold direct the gases to the _____.

(4) Muffler

(a) _____ the sound created by the combustion process and directs the gases to the _____ arrestor.

(b) The spark arrestor diffuses the exiting gases lessening the chance of _____.

c. Speed Control System - Maintains engine speed under load at a constant rate of between 3570 and 3630 rpm (no load speed of 3750 rpm) (References: TM, paragraph 1.19; and Diagram Sheet 1-3-3).

(1) Governor

(a) Flyweight-type mounted to engine _____. The force of the rotating flyweights is transferred through a thrust sleeve and collar to the governor _____ which is balanced against the tension on the governor _____.

(b) When engine speed _____ (load increase) the force of the flyweights rotating on the camshaft decreases and places _____ tension on the governor spring.

(c) The tension repositions the fuel injection pump _____ to increase the stroke of pump plunger allowing more fuel to be delivered through the delivery valve to the fuel _____.

(d) As the engine recovers to the _____ speed, the governor flyweight rotation stabilizes relaxing the tension on the governor _____. This repositions the injection _____ rack, shortening the plunger stroke to allow _____ fuel to injector.

(2) Governor Control Mechanism

(a) External portion of governor _____.

(b) Engine RUN Lever (black).

1) Attached to governor _____ by spring.

2) When placed in _____ position, interlocks with ___ lever and spring tension moves _____ lever to allow fuel flow through fuel injection pump to fuel _____ for engine start up and continued operation.

(c) STOP Lever (red).

1) Activated _____ by depressing the lever or _____ by the low oil pressure _____.

2) When activated, the lever trips the _____ lever releasing tension on governor spring, moving the governor lever to shut off _____ _____, thus stopping engine operation.

d. Diesel Engine Electrical Starting System - Used to start engine in cold weather or as backup to manual starting. Requires 24 vdc external power source (References: TM, paragraph 1.20; and Diagram Sheet 1-3-4).

(1) NATO Slave Receptacle

(a) Accepts power from a NATO slave cable connected to a _____ vdc source.

(b) Supplies power to _____ switch.

(2) START-PREHEAT/PREHEAT/OFF/START Switch

(a) When held in _____ position, power is supplied to _____ solenoid.

(b) When held in _____ position power is supplied to air intake _____.

(c) When held in _____ position, power is supplied to air _____ heaters and starter _____.

(d) Spring loaded to return to OFF position from the other _____ positions de-energizing circuit.

(3) Starter

(a) When power is supplied to starter solenoid, the solenoid _____ pulls in the solenoid plunger which pushes the starter drive _____ to engage with the _____ gear on the engine flywheel.

(b) Simultaneously power is applied to the starter _____ which rotates the drive _____ turning the flywheel to start the engine.

(4) Air Intake Heaters

(a) When energized, heaters warm the air intake _____ and _____ to warm the intake air which aids cold weather starting.

(b) For normal cold weather starting [23°F (-5°C) to -4°F (-20°C)] heaters are allowed to remain energized for _____ minutes, then de-energized prior to attempting to _____ engine (switch to PREHEAT and then to START).

(c) In extreme cold weather [-4°F (-20°C) to -25°F (-32°C)] they _____ energized after initial warming period and while attempting to start engine (switch to PREHEAT then to START/PREHEAT).

e. Generator Voltage Regulation and Output Supply System - Regulates generator set performance, senses load being drawn, and adjust alternator output.

(1) Voltage Regulation (References: TM, paragraphs 1.21.3 and 1.22.3; and Diagram Sheet 1-3-5).

(a) Voltage Regulator

1) Monitors and controls _____ across the alternator power windings by comparing the current in the load _____ circuit with the setpoint established by the VOLTAGE _____ potentiometer.

2) Receives AC input from the power excitation _____ and as long as current in _____ sensing circuit matches setpoint, current is allowed to pass through the power _____ circuit.

3) When current in load _____ circuit is lower than setpoint (indicating a load increase), the DC output _____ reacts by drawing current from the AC input circuit. The AC current is rectified to ___ and applied to the alternator _____ brushes increasing the field magnetism.

4) The increased field magnetism, increases the _____ measured across the _____ windings.

5) The current will continue to _____ until the current in the load _____ circuit matches the regulator _____ (load demand is met).

6) At this point, the DC _____ circuit stops drawing current from the AC _____ _____ circuit and the alternator output _____.

(b) VOLTAGE ADJ. Potentiometer

1) Adjusts the voltage regulator's _____ by loosening the locknut and turning the adjustment screw (clockwise to _____ or counterclockwise to _____ voltage setpoint).

2) Adjustment range 114 to _____ VAC (MEP-531A) or _____ to 32.2 VDC (MEP-501A) as read on voltmeter.

(c) % LOAD Meter

1) Measures the _____ drawn by the _____ from the load terminals.

2) Displays the value as a _____ (0 to 125) of the generator set _____.

(d) VOLTS AC or DC Meter

1) Measures the voltage across the alternator power _____.

2) Displays the value in _____ (0 to 150 for MEP-531A) or _____ (0 to 35 for MEP-501A).

(e) HERTZ Frequency Meter (MEP-531A only)

1) Measures frequency across alternator _____ windings.

2) Displays value in ____ (55 to 65).

(f) Instrument Fuse

1) Blows if current in circuit exceeds ____ amps.

2) _____ voltmeter and frequency meter (MEP-531A) from damage.

(g) Shunt Resistor (MEP-501A only)

1) Resists the 28 vdc alternator output to ____ mv to operate the __ _____ _____.

2) Resistance calculated to meter coil to provide accurate __ _____ _____ indication.

(2) Output Supply (References: TM, paragraphs 1.21.4 and 1.22.4; and Diagram Sheet 1-3-6).

(a) Alternator

1) The alternator produces the _____ for output supply.

2) If the alternator has lost residual _____ (MEP-531A only), the alternator will not produce voltage and the excitation field must be _____.

a) Momentarily apply ____ vdc power source to TB1, terminal 8 (+) and 9 (-).

3) Excitation voltage for MEP-501A is provided through the _____ _____ _____.

(b) ON-OFF Load Circuit Breaker

1) Allows voltage from alternator to load _____ and GFCI _____ receptacles (MEP-531A).

2) Momentary _____ complete or open circuit, while lever physically returns to _____ position.

(c) Load Terminal Board

1) Non-conducting _____ material.

2) Provides base for _____ load terminals while insulating generator set from electric current.

(d) GFCI Convenience Receptacles (MEP-531A only)

1) Provides _____ VAC power for plug-in loads.

2) The ground fault interrupter protects the generator and _____ by opening the circuit in the event of inductive current (short) in the load's _____ circuit.

(e) Power Resistor (MEP-501A only)

1) Protects voltage _____ from alternator output surges.

2) Discharges _____ voltage from voltage regulator on shutdown.

(f) Transient Suppression Diodes (MEP-501A only)

1) Protects load from _____ polarity (cross-connecting the + and - output wiring from alternator).

2) Only allows current to flow in _____ direction.

f. Generator Control System (References: TM, paragraph 1.23; and Diagram Sheet 1-3-7

(1) Dynamo

(a) Generates 12 _____ power for generator control system.

(b) Stator mounted to engine block and dynamo _____ mounted to inside of engine _____.

(c) When engine is running, rotation of _____ on rotor provide the field magnetism necessary to generate electron flow in _____.

(d) The stator conducts the generated ___ vac power via the engine wiring harness to the generator control _____.

(2) Discharge Varistor

(a) Connected at TB1 between wires coming from the _____.

(b) Protects generator _____ unit from inductive voltage surges generated by _____ by limiting the peak discharge voltage to a safe value if magnetic field is suddenly interrupted.

(3) Generator Control Unit

(a) Rectifies 12 _____ input to 12 _____ for control circuit.

(b) Powers _____ meter.

(c) Detects _____ circuit fault conditions and trips ON-OFF load circuit _____.

(d) Energizes low oil pressure _____ and low oil pressure _____ circuit (5-7 second delay for starting).

(e) For MEP-501A only, provides _____ voltage to alternator field until 28 vdc is detected from alternator.

(4) Low Oil Pressure Switch

(a) When engine oil pressure falls to _____ ± 3 psi (103.4 ± 20.7 kPa), the switch _____ and completes the circuit by connecting to ground.

(b) The completed circuit provides power through the generator control unit to the low oil pressure _____.

(5) Low Oil Pressure Solenoid

(a) When powered, the solenoid actuates _____, pulls the LOP _____ shutdown cable which trips the engine _____ lever placing the governor lever in a "no fuel" position, and causes the engine to stop.

(b) Simultaneously, power is provided through the low oil pressure _____ to trip the ON-OFF load circuit _____ disconnecting power to the load.

(6) HOURS Meter

(a) When powered through the _____ control circuit, the HOURS meter runs and maintains a cumulative count of _____ operating hours in 1/10 of an hour increments.

(b) When the engine _____, the generator control circuit is de-energized causing the HOURS meter to ___ running.

DIAGRAM SHEET 1-3-1

FUEL SYSTEM

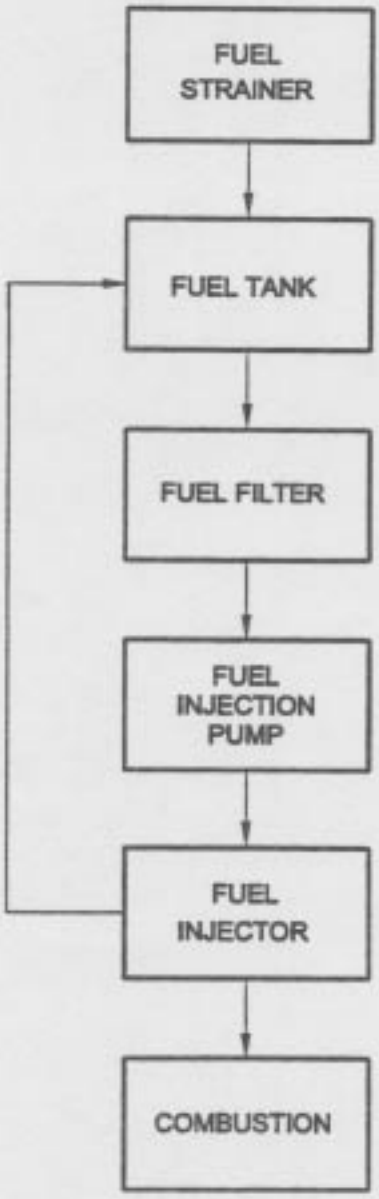

DIAGRAM SHEET 1-3-2

AIR INTAKE AND EXHAUST SYSTEM

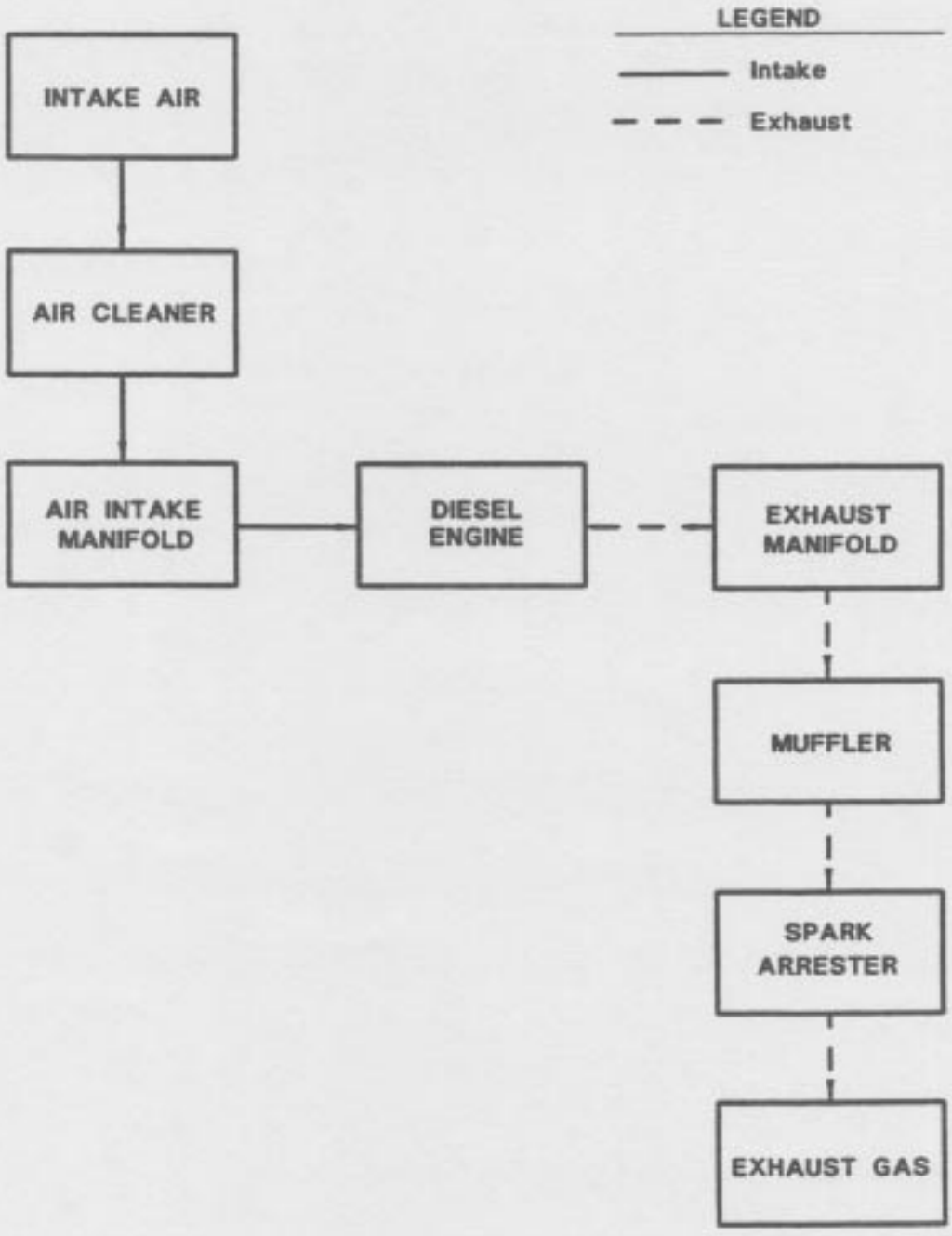

DIAGRAM SHEET 1-3-3

SPEED CONTROL SYSTEM

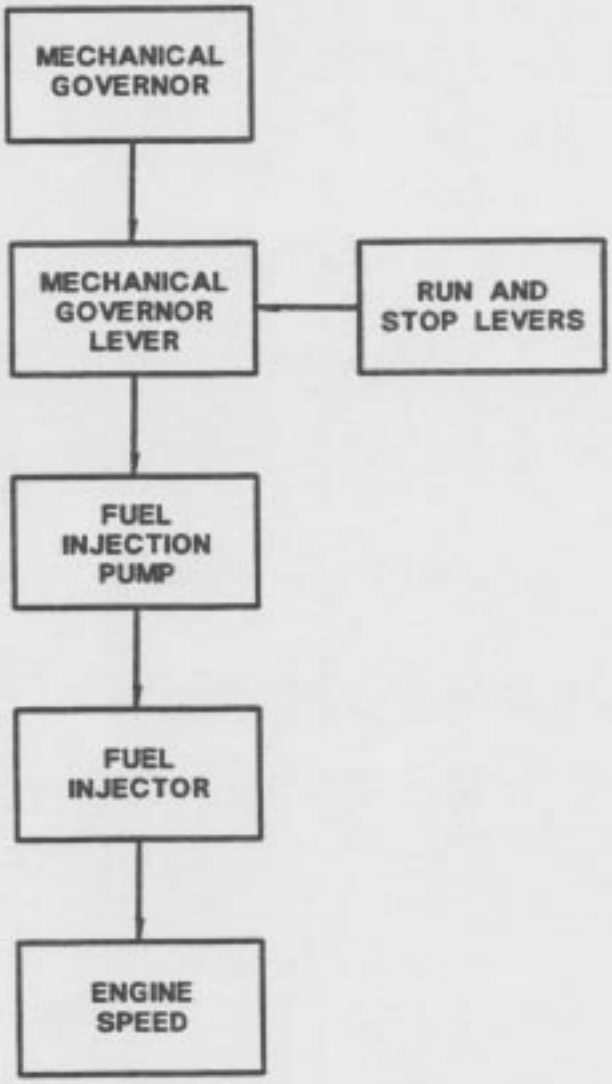

DIAGRAM SHEET 1-3-4

ELECTRICAL STARTING SYSTEM

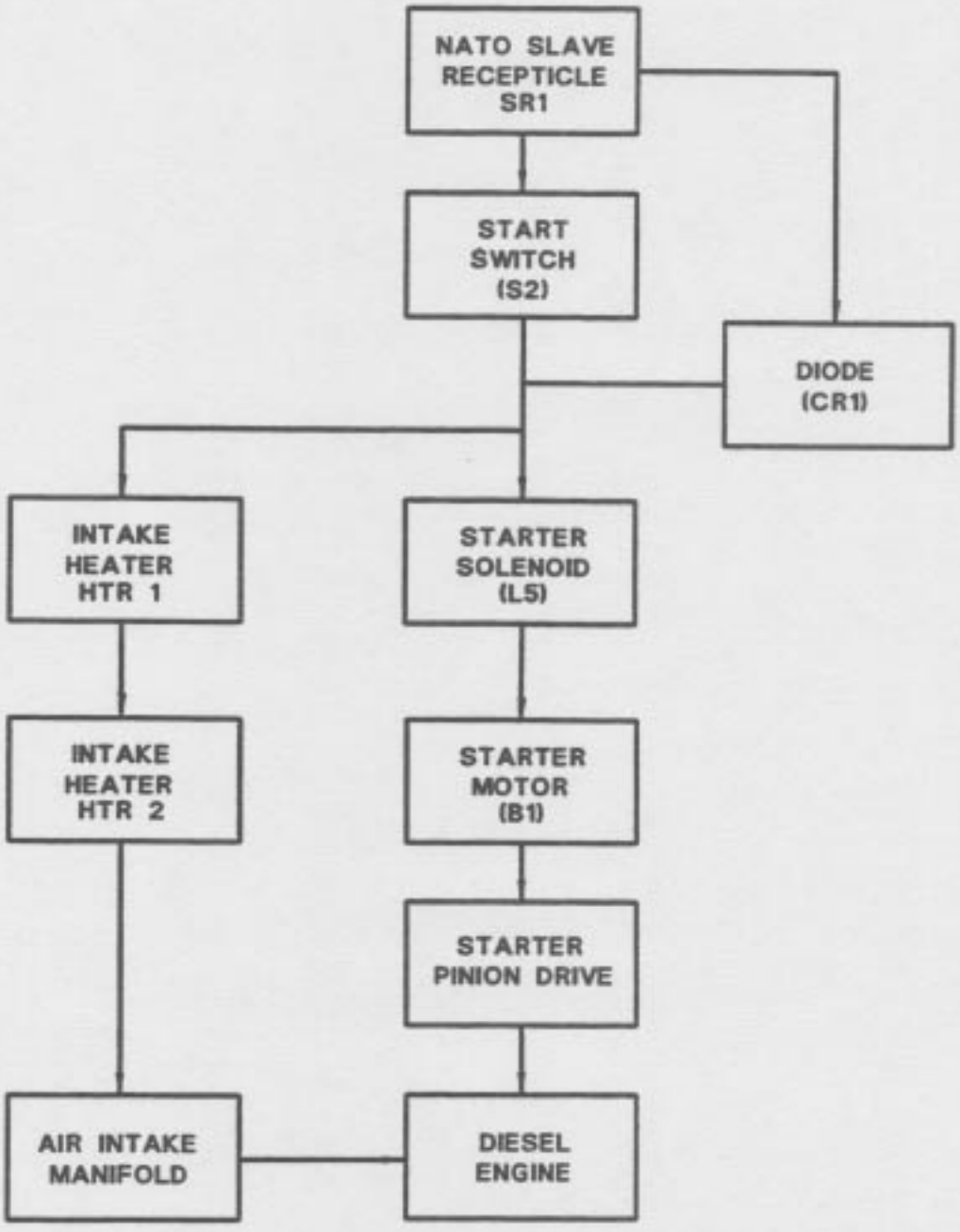

DIAGRAM SHEET 1-3-5

VOLTAGE REGULATION

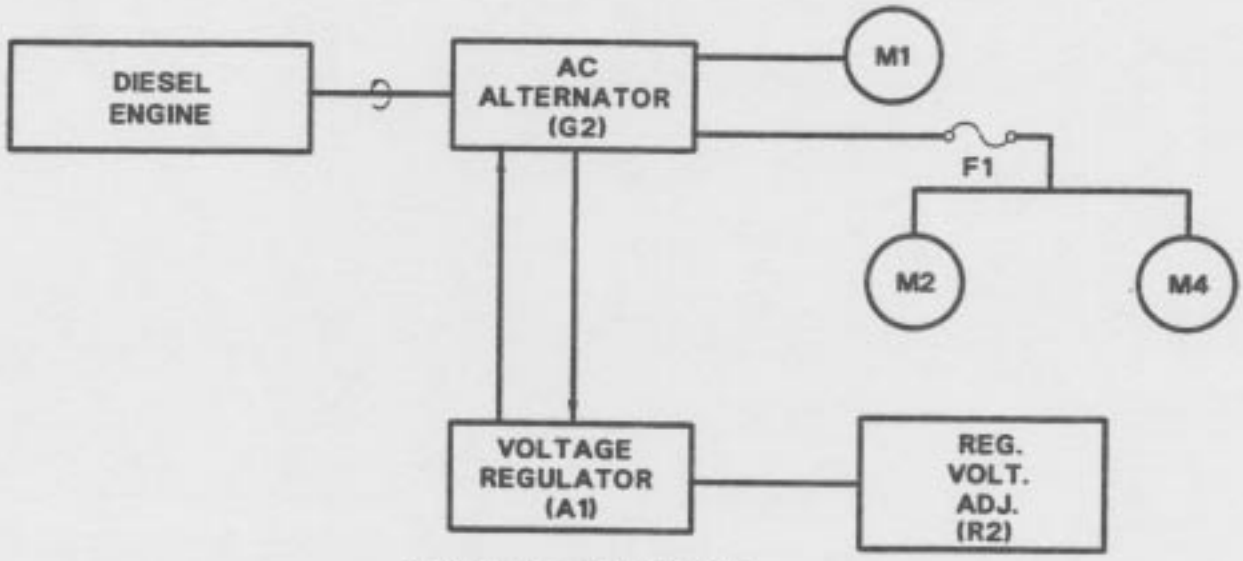

VOLTAGE REGULATION
(MEP-531A)

M1 - % LOAD
M2 - VOLTS METER
M4 - HERTZ METER

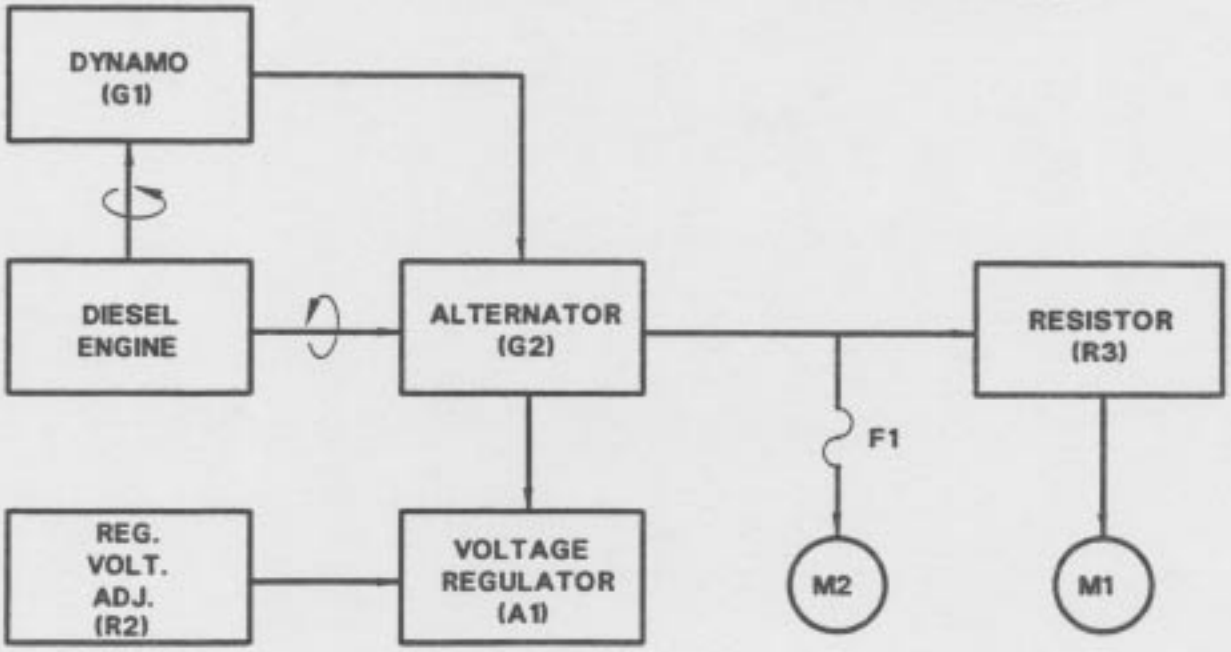

VOLTAGE REGULATION
(MEP-501A)

M1 - % LOAD METER
M2 - VOLTS METER

DIAGRAM SHEET 1-3-6

OUTPUT SUPPLY

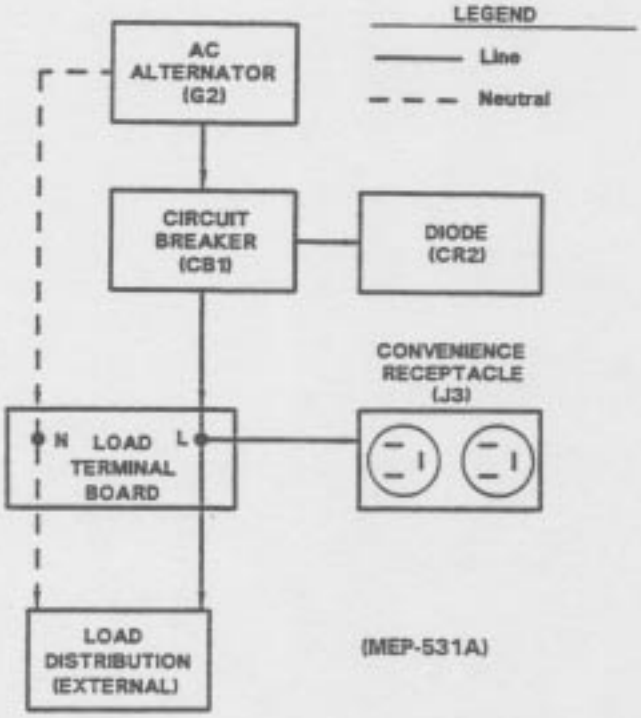

(MEP-531A)

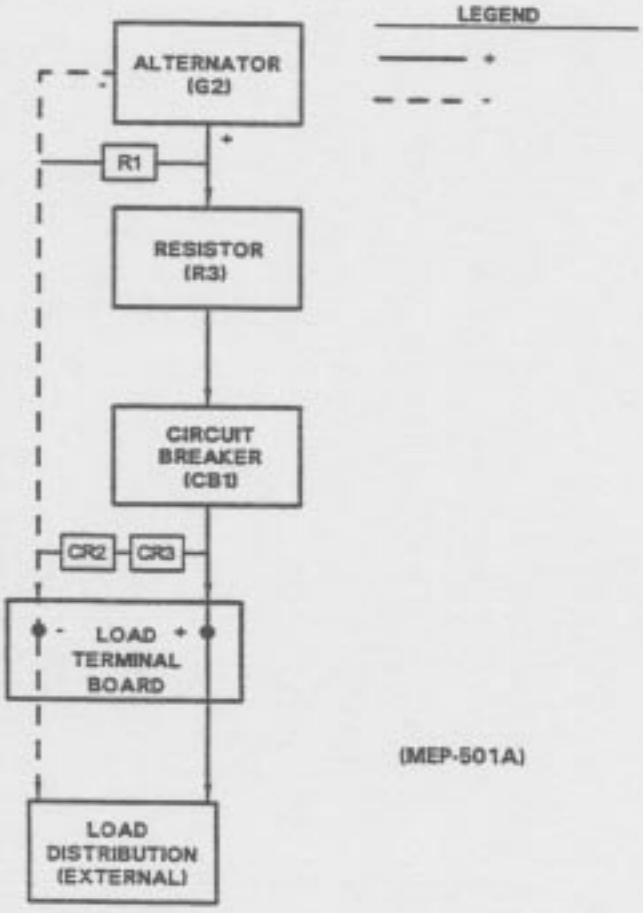

(MEP-501A)

DIAGRAM SHEET 1-3-7

GENERATOR CONTROL SYSTEM

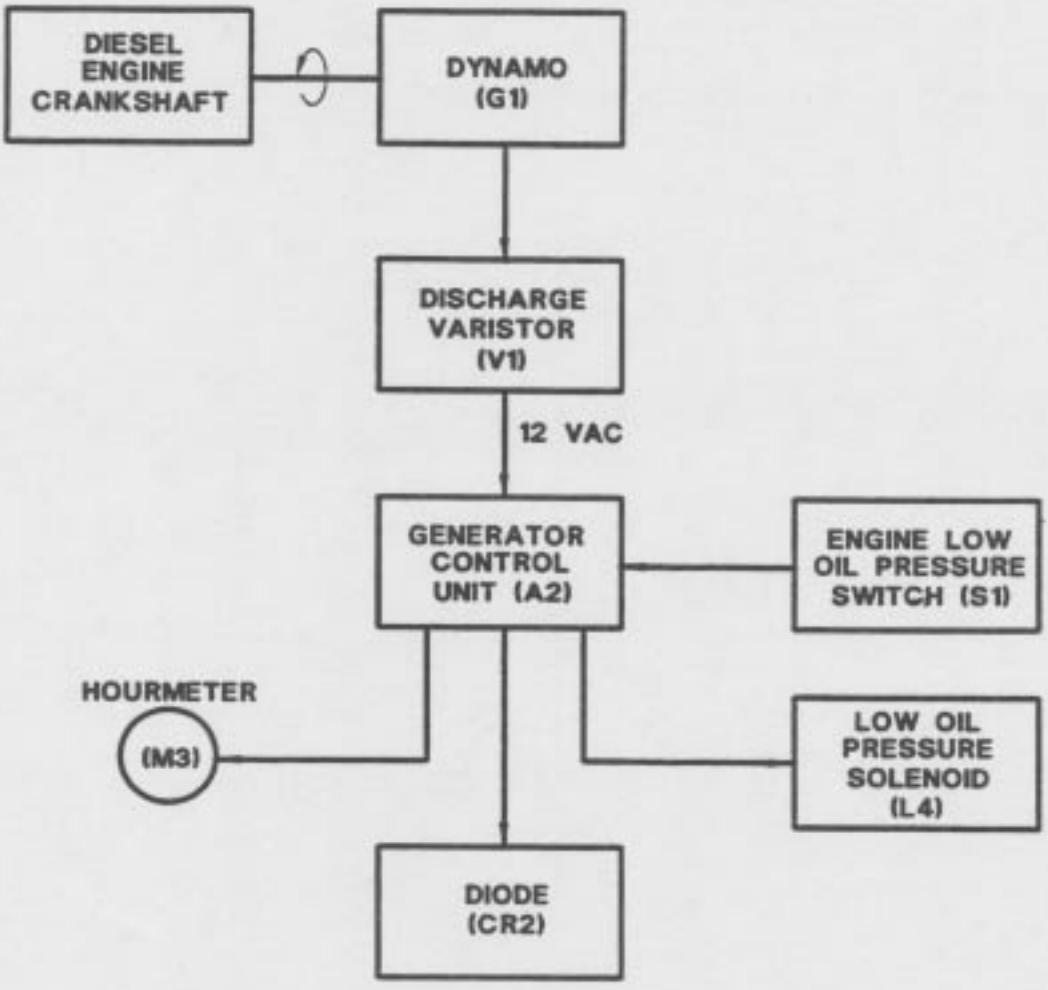

OUTLINE SHEET 2-1-1

INTRODUCTION TO TECHNICAL MANUALS

A. Introduction

1. This Outline Sheet provides you with an outline of the major teaching points in lesson topic: Introduction to Technical Manuals. You should fill in the blanks and retain this information for future use.

B. Outline

1. Topic Learning Objectives:

   a. You will be able to describe the organization, content, and _____ of the generator set documentation.

2. Operator's, Unit and Direct Support Maintenance Manual for 2 kW Generator Sets (TM 9-6115-673-13&P):

   a. Organization

      (1) Divided into Chapters, _____ and Appendices.

      (2) Chapter and Section Titles appear in _____ uppercase letters. Paragraph _____ are underlined.

      (3) Contains tables and _____ view illustrations to simplify and clarify information presented.

   b. Content - Refer to generator set manual Table of Contents.

   c. Use - Provides _____, preventive maintenance, repair procedures, and Repair Parts and Special Tools List _____ for the generator set.

3. Components of End Item (COEI) and Basic Issue Items List (BII) make are contained in Appendix C.

4. Additional Authorization List (ALL) is contained in Appendix D.

5. Expendable and Durable Items List is contained in Appendix E.

6. Repair Parts and Special Tools List for the 2 kW Generator Sets (Appendix F):

   a. Organization

      (1) Divided into _____ Sections.

      (2) Parts listings presented by _____ group.

      (3) Exploded view illustrations placed _____ to parts listing.

   b. Content - Refer to Appendix F, RPSTL Table of Contents.

c. Use

(1) Parts List Columns

(a) ITEM NO. (Column 1) - Lists the _____ used to identify the item on the figure.

(b) SMR CODE (COLUMN 2) - The Source, _____, and Recoverability code, listed by applicable Service, indicates the method for acquiring the item, repair _____ level, and disposition level.

(c) CAGE (COLUMN 3) - Lists the government assigned code of the item's _____.

(d) PART NUMBER (COLUMN 4) - Indicates the part number assigned to the item. Use to identify _____ in Cross Reference Index.

(e) DESCRIPTION AND USABLE ON CODE (UOC) (COLUMN 5) -

1) First entry on listing indicates group _____ and group name.

2) Second entry on listing indicates figure number and figure _____.

3) Remaining entries _____ the items represented in the figure.

(f) QTY (COLUMN 6) - Indicates the quantity of the item used on the _____ represented.

(g) USMC QTY PER EQUIP (COLUMN 7) - Indicates the _____ quantity of the item used on the end item.

(2) Locating Repair Parts

(a) Part Number and NSN Unknown

1) Using Table of Contents, identify _____ group in which item belongs (Electrical System, Fuel System, etc).

2) Identify _____/_____ in which item would be found and turn to page listed.

3) Find the _____ on the illustration and note item number.

4) Using the repair _____ list, find the item number noted from illustration and note part _____ and other pertinent information.

5) Turn to Part Number _____, locate part number, and note _____ for requisitioning purposes.

(b) Part Number or NSN Known

1) Using Part Number or NSN _____ as appropriate, locate part number or NSN and note figure, page number, etc.

2) Use information noted from index to find item on the _____.

7. A cross-reference list of Dewey to Mechron wire numbers is contained in Appendix J.

DIAGRAM SHEET 2-1-1

RPSTL EXAMPLE - SECTION II

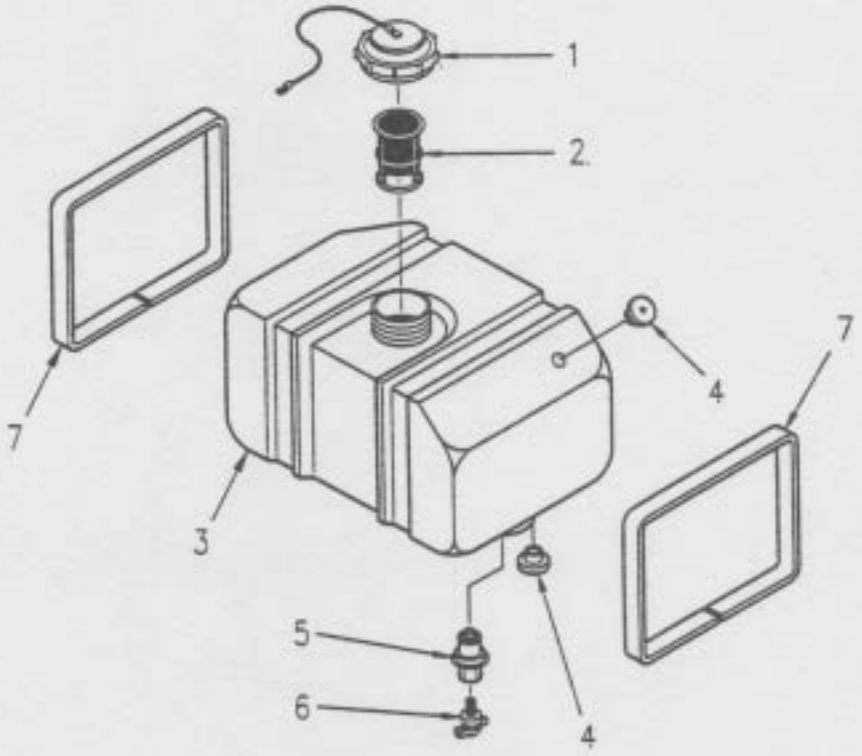

(1) ITEM NO.	(2) SMR CODE a. ARMY	b. AIR FORCE	c. NAVY	d. USMC	(3) CAGEC	(4) PART NUMBER	(5) DESCRIPTION AND USABLE ON CODE (UOC)	(6) QTY	(7) USMC QTY PER EQUIP
							GROUP 02 - FUEL SYSTEM ASSEMBLY (MEP-531A/501A)		
							FIG. F-4 FUEL TANK ASSEMBLY		
1	XBOZZ	XBOZZ	XBOZZ	XBOZZ	30554	95-8033	FUEL TANK CAP ASSY	1	1
2	PAOZZ	PAOZZ	PAOZZ	PAOZZ	0AK42	11425055100	FILTER, GAS	1	1
3	XBOZZ	XBOZZ	XBOZZ	XBOZZ	30554	95-8032	TANK, FUEL	1	1
4	XBOZZ	XBOZZ	XBOZZ	XBOZZ	13862	95-8137	BUSHING, RUBBER	2	2
5	XBOZZ	XBOZZ	XBOZZ	XBOZZ	59647	57558	ADAPTER, DRAIN, FUEL	1	1
6	PAOZZ	PAOZZ	PAOZZ	PAOZZ	04627	12878	COCK, DRAIN	1	1
7	MOOZZ	MOOZZ	MOOZZ	MOOZZ	30554	95-8031-4	RUBBER, CLOSED-CELL Make from ASTM D 1056, Figure Bulk, Item 1, approx. 28 inches required.	2 -	2
							END OF FIGURE		

OUTLINE SHEET 3-1-1

OPERATION

A. Introduction

1. This Outline Sheet provides you with an outline of the major teaching points in lesson topic: Operation. You should take notes as desired and retain this information for future use.

B. Outline

1. Topic Learning Objectives:

_____

_____

_____

2. Safety Precautions:

_____

_____

_____

3. Controls and Indicators:

_____

_____

4. Operating Sequence:

a. Manual Starting [23°F (5°C) to 122°F (50°C)]

_____

_____

_____

b. Electric Starting [23°F (5°C) to 122°F (50°C)]

_____

_____

_____

c. Electric Starting [Between 23°F (5°C) to -5°F (-21°C)]

_____

_____

_____

d. Electric Starting [Between -5°F (21°C) to -25°F (-32°C)]

_____

_____

_____

e. Stopping Procedures

_____

_____

_____

JOB SHEET 3-1-1

OPERATION OF GENERATOR SET

A. INTRODUCTION

1. This Job Sheet will help you become proficient in operating the generator set using the generator set manual.

B. EQUIPMENT

1. Generator Set.

C. REFERENCE

1. Generator Set Manual.

D. JOB STEPS

STEP 1 - Preventive Maintenance Checks and Services (PMCS)

a. What paragraph in the generator set manual addresses operator PMCS procedures?

_____

b. Prior to operating the generator set which PMCS maintenance interval procedures must be performed?

_____

c. Perform the PMCS maintenance interval procedures identified in step 1.b above, and record the results.

_____

_____

_____

STEP 2 - Manual Starting Procedures [23°F (5°C) to 122°F (50°C)]

a. What paragraph in the generator set manual addresses the manual starting procedures in Step 2?

_____

b. What lever is depressed to allow easy pulling of the recoil starter?

_____

c. How long should the generator set run prior to closing output load circuit breaker (adding a load)?

_____

d. Perform manual starting procedures and record any problems encountered.

_____

_____

STEP 3 - Operation

a. While the generator set is operating, which PMCS maintenance interval procedures must be performed?

_____

b. Perform the PMCS maintenance interval procedures identified in step 3.a above, and record the results.

_____

_____

STEP 4 - Stopping Procedures

a. What paragraph in the generator set manual addresses stopping procedures?

_____

b. Perform stopping procedures and record any problems encountered.

_____

_____

STEP 5 - Electric Starting Procedures [23°F (5°C) to 122°F (50°C)]

a. What paragraph in the generator set manual addresses the electric starting procedures in Step 5?

_____

b. What is the longest you should hold the START-PREHEAT/PREHEAT/OFF/START switch in the START position before possibly damaging the starter?

_____

c. What is the difference in the positioning of the START-PREHEAT/PREHEAT/OFF/START switch for electric starting between 23°F (-5°C) to -5°F (-21°C) from procedures identified in step 5.a?

_____

d. What is the difference in the positioning of the START-PREHEAT/PREHEAT/OFF/START switch for electric starting between -5°F (-21°C) to -25°F (-32°C) from procedures identified in step 5.a?

_____

e. Perform electric starting procedures identified in step 5.a, and record any problems encountered.

_____

_____

STEP 6 - Operation

a. What is the normal indication for the VOLTS AC voltmeter while generator set is operating?

_____

b. What is the normal indication for the HERTZ frequency meter while generator set is operating?

_____

_____

STEP 7 - Stopping Procedures

a. Perform stopping procedures and record any problems encountered.

_____

_____

OUTLINE SHEET 4-1-1

OPERATOR TROUBLESHOOTING

A. Introduction

1. This Outline Sheet provides you with an outline of the major teaching points in lesson topic: Operator Troubleshooting. You should take notes as desired and retain this information for future use.

B. Outline

1. Topic Learning Objectives:

_____

_____

_____

2. Safety Precautions:

_____

_____

_____

3. Troubleshooting Table:

_____

_____

_____

_____

JOB SHEET 4-1-1

OPERATOR TROUBLESHOOTING

A. INTRODUCTION

1. This Job Sheet will help you become proficient in performing operator level troubleshooting on the generator set using the generator set manual.

B. EQUIPMENT

1. Generator Set.

C. REFERENCE

1. Generator Set Manual.

D. JOB STEPS

STEP 1 - Perform Manual Starting Procedures.

a. Record any problems encountered.

_____

STEP 2 - Perform Troubleshooting

a. What paragraph in the generator set manual contains Operator Troubleshooting Procedures?

_____

b. On what page number are the troubleshooting procedures for the malfunction identified in step 1.a?

_____

c. Perform the troubleshooting procedures identified in step 2.b, record the problem and take appropriate corrective action.

_____

_____

STEP 3 - Perform manual starting procedures.

a. Verify that malfunction is corrected and record any further malfunction(s).

_____

_____

b. Perform troubleshooting steps for any further malfunction(s), and record corrective action.

_____

_____

STEP 4 - Repeat step 3 until generator set is operating properly.

OUTLINE SHEET 4-2-1

UNIT/DS TROUBLESHOOTING

A. Introduction

1. This Outline Sheet provides you with an outline of the major teaching points in lesson topic: Unit Troubleshooting. You should take notes as desired and retain this information for future use.

B. Outline

1. Topic Learning Objectives:

_____

_____

_____

2. Safety Precautions:

_____

_____

_____

3. Troubleshooting Table:

_____

_____

_____

_____

JOB SHEET 4-2-1

UNIT/DS TROUBLESHOOTING

A. INTRODUCTION

1. This Job Sheet will help you become proficient in performing unit/DS level troubleshooting on the generator set using the generator set manual.

B. EQUIPMENT

1. Generator Set.

C. REFERENCE

1. Generator Set Manual.

2. General Mechanic's Tool Kit

D. JOB STEPS

Operator reported that diesel engine would not start manually.

STEP 1 - Perform Manual Starting Procedures.

a. Record any problems encountered.

_____

STEP 2 - Perform Troubleshooting

a. What paragraphs in the generator set manual contain Unit level and DS level troubleshooting procedures?

_____

b. On what page number are the unit troubleshooting procedures for the malfunction identified in step 1.a?

_____

c. Perform the troubleshooting procedures identified in step 2.b, record the problem and take appropriate corrective action.

_____

_____

STEP 3 - Perform manual starting procedures.

a. Verify that malfunction is corrected and record any further malfunction(s).

_____

b. Perform troubleshooting steps for any further malfunction(s), and record corrective action.

_____

_____

STEP 4 - Repeat step 3 until generator set is operating properly.

OUTLINE SHEET 5-1-1

GENERATOR SET PREVENTIVE CHECKS AND SERVICES (PMCS)

A. Introduction

1. This Outline Sheet provides you with an outline of the major teaching points in lesson topic: Generator Set Preventive Maintenance Checks and Services (PMCS). You should take notes as desired and retain this information for future use.

B. Outline

1. Topic Learning Objectives:

_____

_____

_____

2. Safety Precautions:

_____

_____

_____

3. Preventive Maintenance:

_____

_____

_____

_____

JOB SHEET 5-1-1

GENERATOR SET PREVENTIVE CHECKS AND SERVICES (PMCS)

A. INTRODUCTION

1. This Job Sheet will help you become proficient in performing unit level PMCS on the generator set using the generator set manual.

B. EQUIPMENT

1. Generator Set.

2. General Mechanic's Tool Kit

C. REFERENCE

1. Generator Set Manual.

D. JOB STEPS

STEP 1 - Unit Level Preventive Maintenance Checks and Services (PMCS)

a. What table in the generator set manual lists the Unit Level PMCS requirements and on what page is it found?

_____

b. Which column indicates when to perform a listed PMCS procedure?

_____

c. Perform Monthly PMCS and record results.

_____

_____

d. Perform Semi-annual PMCS and record results.

_____

_____

_____

e. Perform Annual PMCS and record results.

_____

_____

_____

f. Perform Hourly PMCS and record results.

_____

_____

_____

OUTLINE SHEET 5-2-1

ENGINE STARTER (MEP-531A) REPLACEMENT

A. Introduction

1. This Outline Sheet provides you with an outline of the major teaching points in lesson topic: Engine Starter (MEP-531A) Replacement. You should take notes as desired and retain this information for future use.

B. Outline

1. Topic Learning Objectives:

_____

_____

_____

2. Safety Precautions:

_____

_____

_____

3. Replace Engine Starter:

_____

_____

_____

_____

JOB SHEET 5-2-1

ENGINE STARTER (MEP-531A) REPLACEMENT

A. INTRODUCTION

1. This Job Sheet will help you become proficient in performing an engine starter replacement using the generator set manual.

B. EQUIPMENT

1. Generator Set.

2. General Mechanic's Tool Kit

C. REFERENCE

1. Generator Set Manual.

D. JOB STEPS

STEP 1 - Remove Engine Starter (MEP-531A).

a. What paragraph in the generator set manual provides the procedures for removing the engine starter on the MEP-531A?

_____

b. Perform procedures identified in step 1.a. and record results.

_____

_____

STEP 2 - Install Engine Starter Assembly.

a. What paragraph in the generator set manual provides the procedures for installing the engine starter on the MEP-531A?

_____

b. Perform procedures identified in step 2.a. and record results.

_____

_____

OUTLINE SHEET 6-1-1

CORROSION CONTROL PROCEDURES

A. Introduction

1. This Outline Sheet provides you with an outline of the major teaching points in lesson topic: Corrosion Control Procedures. You should fill in the blanks and retain this information for future use.

B. Outline

1. Topic Learning Objectives:

a. You will be able to describe the procedures used to _____ and prevent _____ on the generator set.

2. Safety Precautions:

a.

WARNING

Proper _____ _____ _____ (___) must be used in accordance with OSHA Regulation, 29CFR 1926.62, to protect employees from potential adverse health hazards of lead or lead dust in air while sanding _____ paint. Consult your local _____ Office before working on sanding CARC painted surfaces.

3. Corrosion:

a. Definition - Corrosion is the _____ of a _____ substance as a result of its exposure to the _____.

b. Prevention.

(1) Store generator set in a dry place and keep _____ when not in use.

(2) Shield from _____ as much as possible (use barriers).

(3) Wipe away and _____ surfaces that accumulate _____ whenever possible.

(4) Maintain _____ on painted surfaces (touch-up paint).

(5) Clean and treat _____ surfaces in accordance with technical documentation.

4. Maintenance of Surface Coating:

a. Surface Preparation.

(1) The key to achieving a successful and _____ lasting coating lies in good _____ between the coating and metallic surface.

(2) Dirt, oil, grease, _____ by-products, and other contaminants prevent _____ between coating and metal.

(3) Proper _____ to remove contaminants is therefore the first _____ to maintaining surface coating.

(a) Cleaning method used is dependent on _____-type and surface _____ (wire brush, sanding, cleaning solvent, etc.).

(b) Refer to technical documentation for _____ method of specific components.

b. Touch-up Painting.

(1) _____ edges of existing sound paint with light sanding to provide an adequate _____ for touch-up paint.

(2) Apply approved _____, then finish paint in _____ light coats.